Current part is item (17) on diagram. Available at www.oshkoshequipment.com

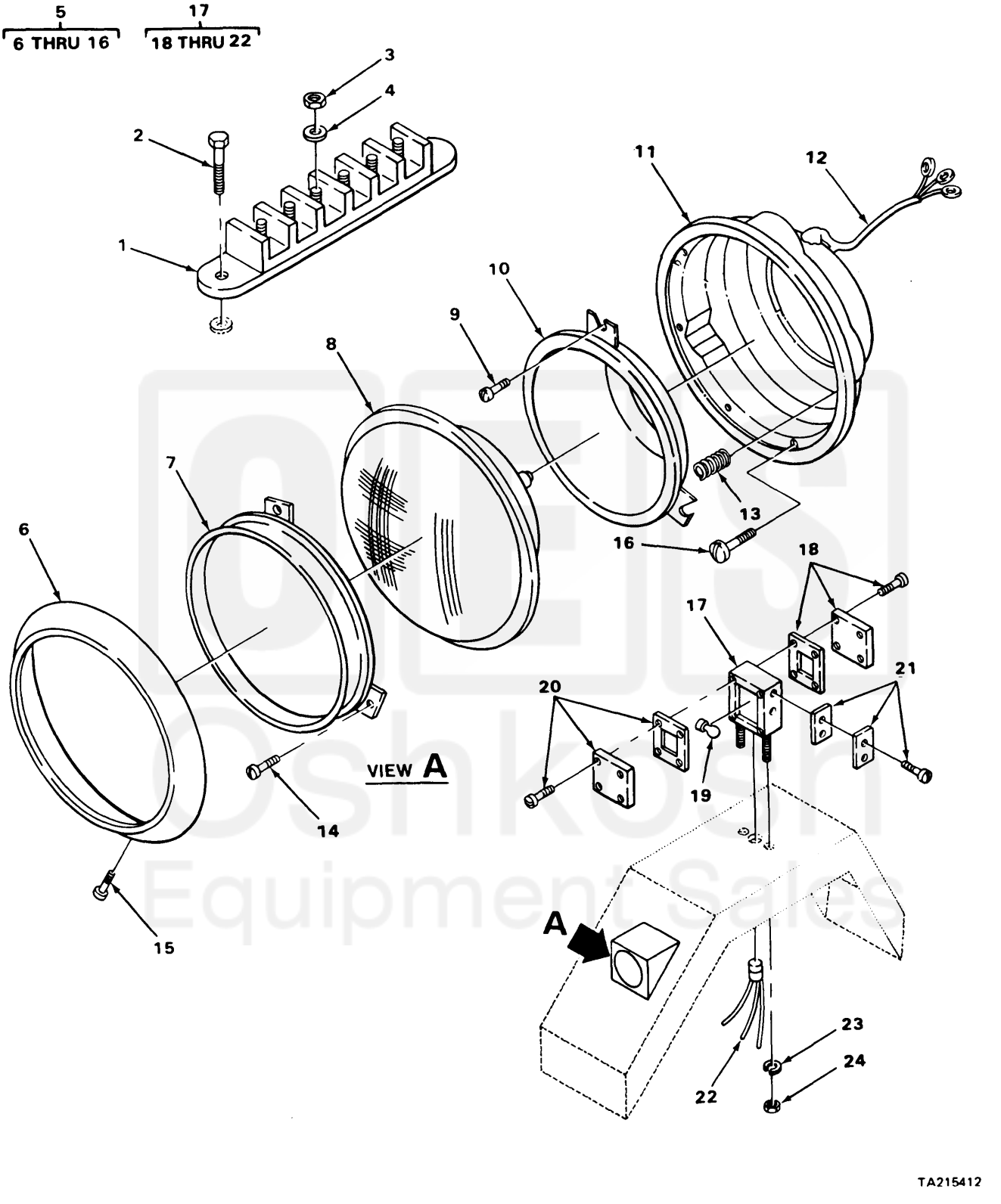

FIGURE 42. HEADLAMP ASSEMBLY.

Current part is item (17) on diagram. Available at www.oshkoshequipment.com

Current part is item (17) on diagram. Available at www.oshkoshequipment.com

(1) ITEM NO	(2) SMR CODE	(3) FSCM	(4) PART NUMBER	(5) DESCRIPTION AND USABLE ON CODE (UOC)	(6) QTY
				GROUP:0609 LIGHTS	
				FIGURE 42. HEADLAMP ASSEMBLY.	
1	PAOZZ	11873	C4559-6	TERMIANL BOARD	1
2	PAOZZ	24617	9419380	SCREW,TAPPING,THREA	2
3	PAOZZ	96906	MS35649-202	NUT,PLAIN,HEXAGON	5
4	PAOZZ	34623	5962514	WASHER,LOCK	5
5	PAOOO	34623	SF-MA 191A-20000	HEADLIGHT	2
6	PAOZZ	34623	2-866-60-P	.RETAINER,HADLAMP	1
7	PAOZZ	34623	MA5-21004	.RING,RETAINING	1
8	PAOZZ	08108	6015	.LAMP,INCANDESCENT	1
9	PAOZZ	34623	MA310-21173	.SETSCREW	2
10	XAOZZ	34623	MA207-22885	.NEST,BULB	1
11	XAOZZ	34623	MA207-22886	.BODY,HEADLAMP ASSY	1
12	PAOZZ	34623	MA207-22887	.CABLE ASSEMBLY,SPEC	1
13	PAOZZ	34623	6-816	.SPRING,HELICAL,EXTE	1
14	PAOZZ	34623	MA268-21126	.SCREW,TAPPING,THREA	3
15	PAOZZ	96906	MS51861-45	.SCREW,TAPPING,THREA	6
16	PAOZZ	34623	2-588	.SCREW	1
17	PAOOO	89346	444660C91	STOP LIGHT-TAILLIGH LH	1
17	PAOOO	29930	444659C91	DIRCTIONAL LIGHT,V RH	1
18	PAOZZ	77977	9079	.LENS,LIGHT	1
19	PAOZZ	81343	1156	.LAMP,INCANDESCENT	1
20	PAOZZ	77977	9079A	.LENS,LIGHT	1
21	PAOZZ	77977	9080	.KIT,LENS	1
22	PAOZZ	77977	9260	.FUSE,PLUG	1
23	PAOZZ	24617	2436162	WASHER,FLAT	4
24	PAOZZ	24617	9422295	NUT,SELF-LOCKING	4
				END OF FIGURE	

Current part is item (17) on diagram. Available at www.oshkoshequipment.com